CONCEPTUAL

CITY OF COLORADO SPRINGS
We Create Community

CITY OF COLORADO SPRINGS

CITY ENGINEERING

PO NUMBER: RTA0001188, CONTRACT NUMBER: R006085

STRUCTURAL EVALUATION

ACADEMY BOULEVARD OVER COTTONWOOD CREEK

PREPARED BY:
FELSBURG HOLT & ULLEVIG
508 S. TEJON STREET
COLORADO SPRINGS, CO 80903
T (719)314-1800
F (719)314-1804

CONTACT:
STEVEN R. MURRAY, PE

PREPARED FOR:
CITY OF COLORADO SPRINGS
30 S. NEVADA AVENUE
COLORADO SPRINGS, CO 80903
T (719)385-5385

CONTACT:
AARON EGBERT, PE
DAN KRUEGER, PE

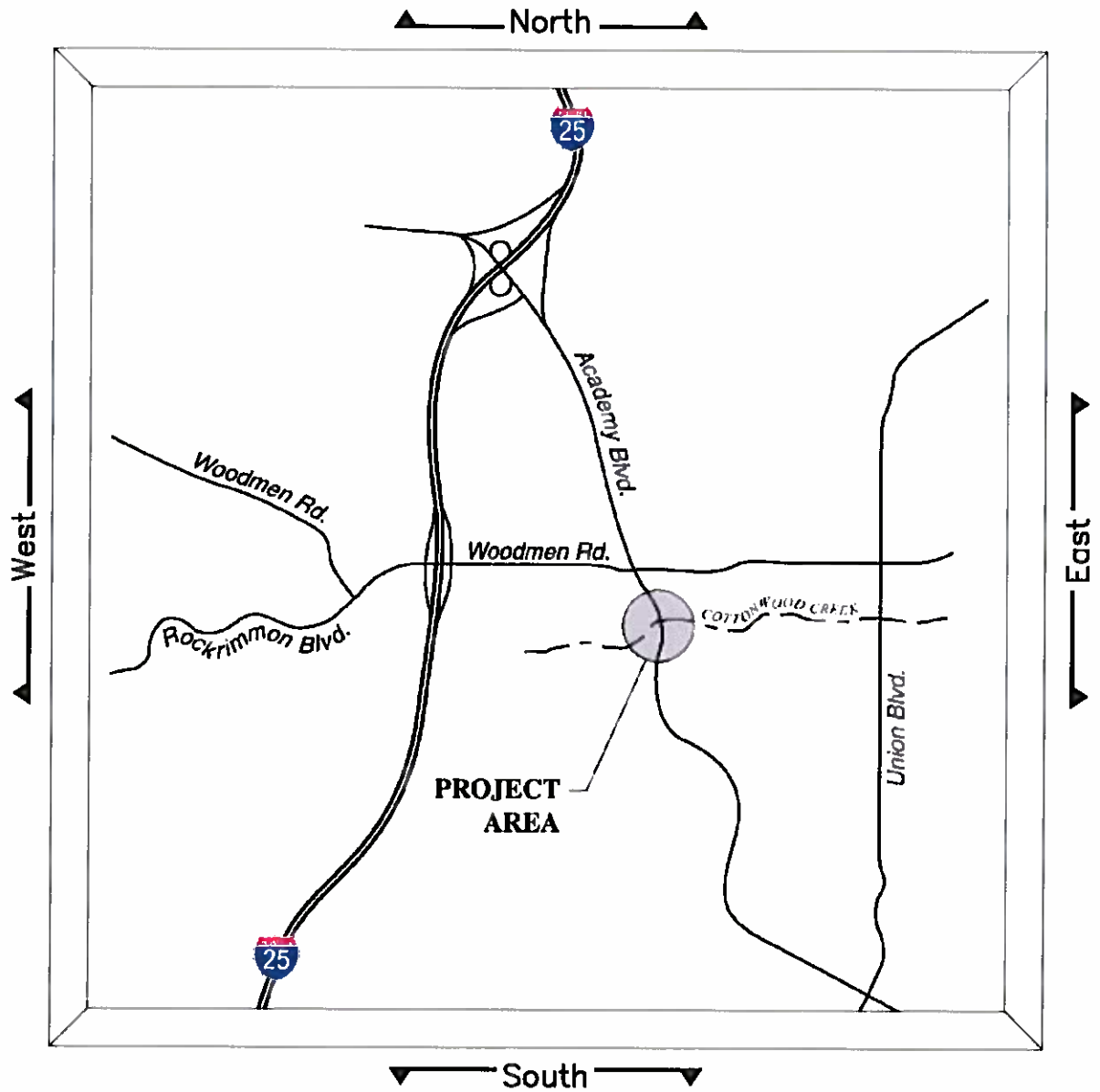

VICINITY MAP
NTS

SHEET NO.	INDEX OF SHEETS
1	TITLE SHEET
2–4	TYPICAL SECTIONS
5–6	ROADWAY PLANS
7	TRAIL PLAN

811 Know what's below. Call before you dig.

DRAFT

Computer File Information			
Creation Date:	11/15/11	Initials:	BJH
Last Modification Date:	2/8/12	Initials:	BEN
Full Path:	S:\11117\CAD\Sheets		
Drawing File Name:	A11117TTL01.dwg		
Acad Version 2009	Scale: NA	Units:	English

Index of Revisions		

CITY OF COLORADO SPRINGS
We Create Community
PO Box 1575, Mail Code 410
30 S. Nevada, Suite 401
Colorado Springs, CO 80920
Phone (719) 385-5918
Fax (719) 385-5537

FELSBURG HOLT & ULLEVIG
508 S. Tejon St.
Colorado Springs, CO 80903
Phone (719) 314-1800
Fax (719) 314-1804

As Constructed	
No Revisions:	
Revised:	
Void:	

STRUCTURAL EVALUATION ACADEMY OVER COTTONWOOD CREEK TITLE SHEET		
Designer:	Detailer:	BJH
Sheet Subset: TITLE	Subset Sheets: TS–1 of 1	

Project No./Code
11–117
Sheet Number 1

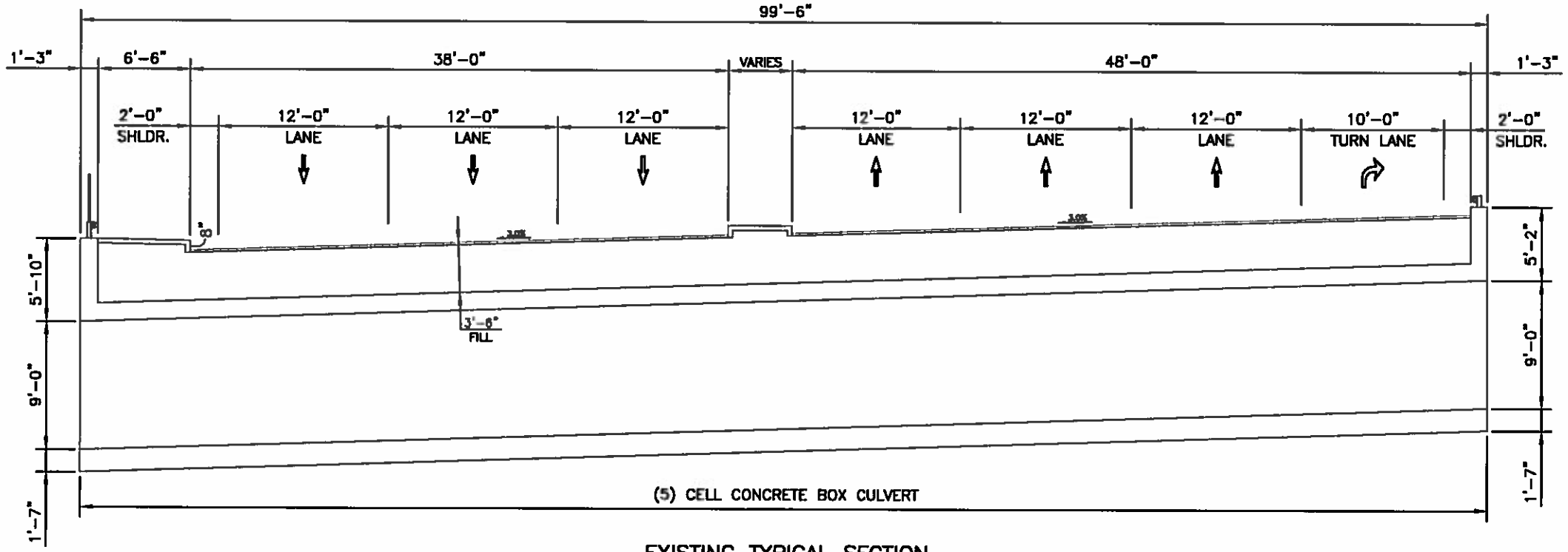

EXISTING TYPICAL SECTION

(LOOKING NORTH)

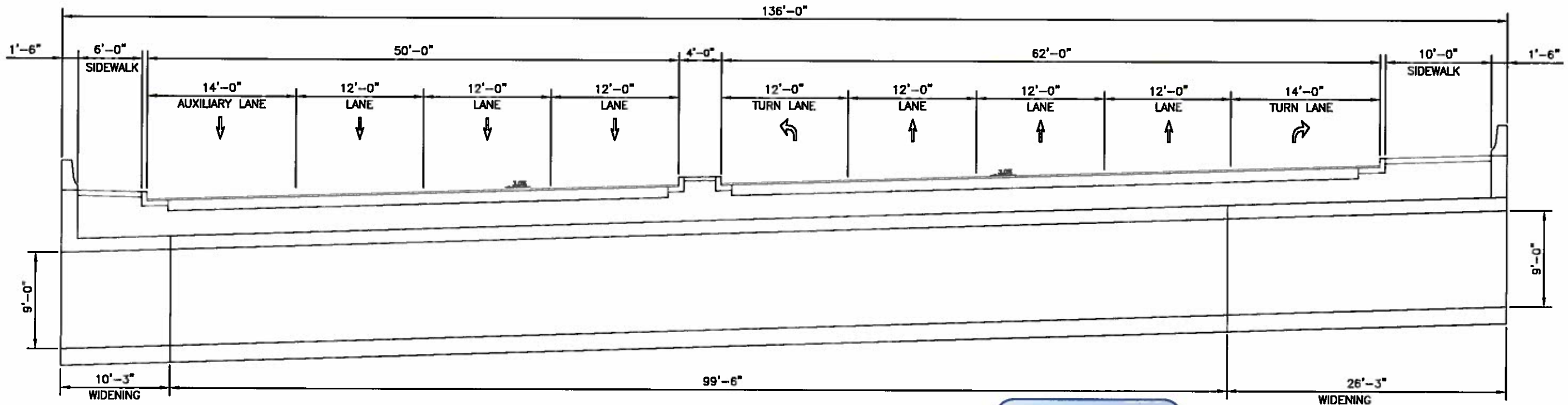

PROPOSED TYPICAL SECTION

(LOOKING NORTH)

DRAFT

Computer File Information			
Creation Date:	2/8/12	Initials:	PRS
Last Modification Date:	2/8/12	Initials:	BEN
Full Path:	S:\11117\CAD\Sheets		
Drawing File Name:	CSG-I 17 Typical Section.dwg		
Acad Version 2009	Scale: 1"=10'	Units:	English

Index of Revisions		

CITY OF COLORADO SPRINGS
We Create Community
PO Box 1575, Mail Code 410
30 S. Nevada, Suite 401
Colorado Springs, CO 80920
Phone (719) 385-5918
Fax (719) 385-5537

FELSBURG HOLT & ULLEVIG
508 S. Tejon St.
Colorado Springs, CO 80903
Phone (719) 314-1800
Fax (719) 314-1804

As Constructed	
No Revisions:	
Revised:	
Void:	

ACADEMY OVER COTTONWOOD CREEK DRAINAGE CULVERT TYPICAL SECTIONS

Designer:	PRS	Detailer:	PRS
Sheet Subset:	CULVERT	Subset Sheets:	C-1of 3

Project No./Code
11-117
Sheet Number 2

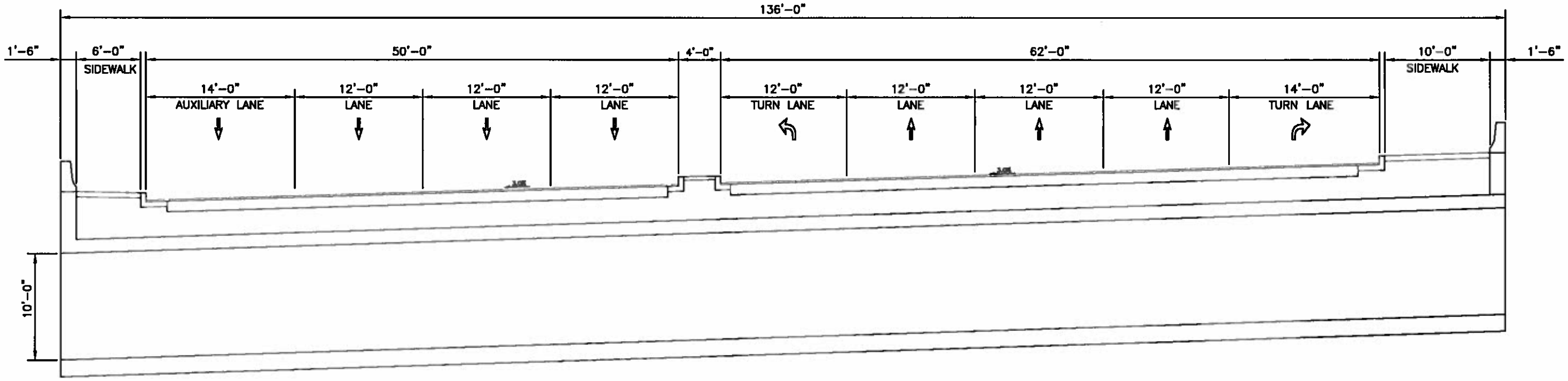

PROPOSED TYPICAL SECTION

(LOOKING NORTH)

DRAFT

Computer File Information			
Creation Date:	2/8/12	Initials:	PRS
Last Modification Date:	2/8/12	Initials:	BEN
Full Path:	S:\11117\CAD\Sheets		
Drawing File Name:	CSG-I 17 Typical Section.dwg		
Acad Version 2009 Scale:	1"=10'	Units:	English

Index of Revisions

CITY OF COLORADO SPRINGS
We Create Community
PO Box 1575, Mail Code 410
30 S. Nevada, Suite 401
Colorado Springs, CO 80920
Phone (719) 385-5918
Fax (719) 385-5537

FELSBURG HOLT & ULLEVIG
508 S. Tejon St.
Colorado Springs, CO 80903
Phone (719) 314-1800
Fax (719) 314-1804

As Constructed
No Revisions:
Revised:
Void:

ACADEMY OVER COTTONWOOD CREEK
PEDESTRIAN UNDERPASS
TYPICAL SECTIONS

Designer:	PRS	Detailer:	PRS
Sheet Subset:	CULVERT	Subset Sheets:	C-2of 3

Project No./Code
11-117

Sheet Number 3

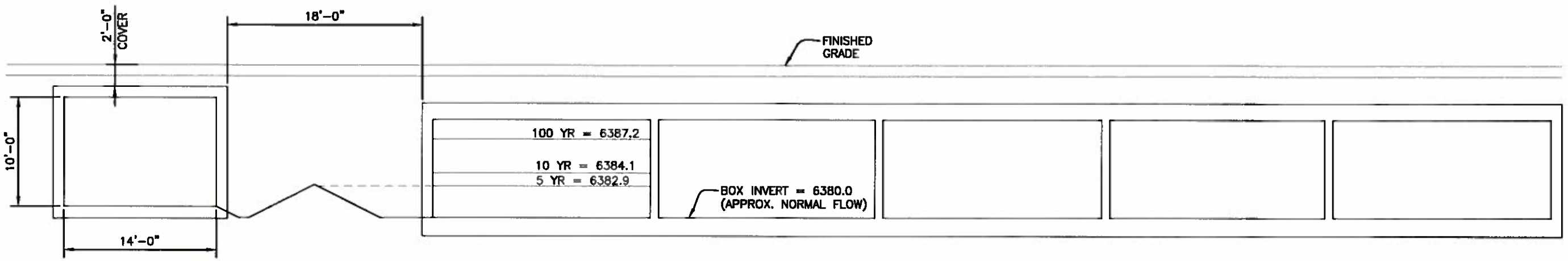

SECTION – SEPARATED BOX

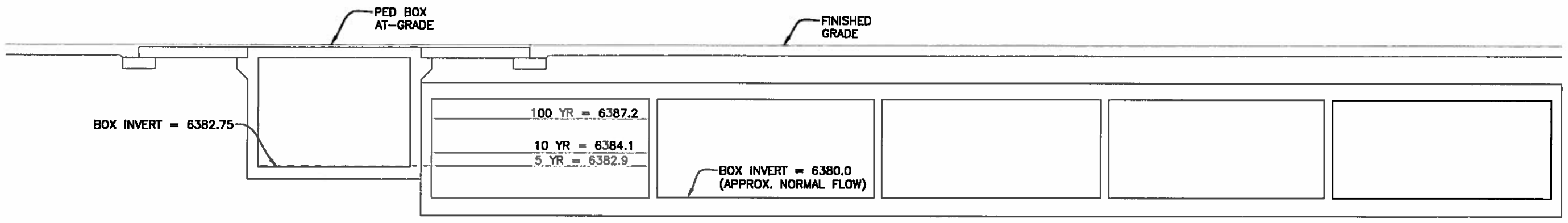

OPTIONAL SECTION – ADJACENT BOX
(FOR INFORMATION ONLY)

DRAFT

Computer File Information			
Creation Date:	2/8/12	Initials:	PRS
Last Modification Date:	2/8/12	Initials:	BEN
Full Path:	S:\11117\CAD\Sheets		
Drawing File Name:	CSG-I-17 Typical Section.dwg		
Acad Version 2009 Scale:	1"=10'	Units:	English

Index of Revisions		

CITY OF COLORADO SPRINGS
We Create Community
PO Box 1575, Mail Code 410
30 S. Nevada, Suite 401
Colorado Springs, CO 80920
Phone (719) 385-5918
Fax (719) 385-5537

FELSBURG HOLT & ULLEVIG
508 S. Tejon St.
Colorado Springs, CO 80903
Phone (719) 314-1800
Fax (719) 314-1804

As Constructed	
No Revisions:	
Revised:	
Void:	

ACADEMY OVER COTTONWOOD CREEK
CULVERT SECTION

Designer:	PRS	Detailer:	PRS
Sheet Subset:	CULVERT	Subset Sheets:	C-3of 3

Project No./Code	
11-117	
Sheet Number	4

811 Know what's below. Call before you dig.

PARCEL DATA
WOODMEN PHASE 1 DESIGN
PROPOSED ACADEMY GEOMETRY
FULL R.O.W. ACQUISITION
PARTIAL R.O.W. ACQUISITION

0 50 100
SCALE: 1"=100'

Computer File Information					
Creation Date:	11/7/11	Initials:	BJH		
Last Modification Date:	2/24/12	Initials:	BEN		
Full Path:	S:\11117\CAD\Sheets				
Drawing File Name:	R11117PLN01.dwg				
Acad Version 2009	Scale:	1"=100'	Units:	English	

Index of Revisions		

CITY OF COLORADO SPRINGS
We Create Community
P.O. Box 1575, Mail Code 410
30 S. Nevada, Suite 401
Colorado Springs, CO 80920
Phone (719) 385-5918
Fax (719) 385-5537

FELSBURG HOLT & ULLEVIG
508 S. Tejon St.
Colorado Springs, CO 80903
Phone (719) 314-1800
Fax (719) 314-1804

As Constructed
No Revisions:
Revised:
Void:

ACADEMY BOULEVARD OVER COTTONWOOD CREEK ROADWAY PLAN

Designer:	SRM	Detailer:	BJH
Sheet Subset:	ROADWAY	Subset Sheets:	RP-1 of 2

Project No./Code
11-117
Sheet Number 5

S:\11117\CAD\Sheets\R11117PLN01.dwg, 2/24/2012 6:00:54 PM, Ben

811
Know what's below.
Call before you dig.

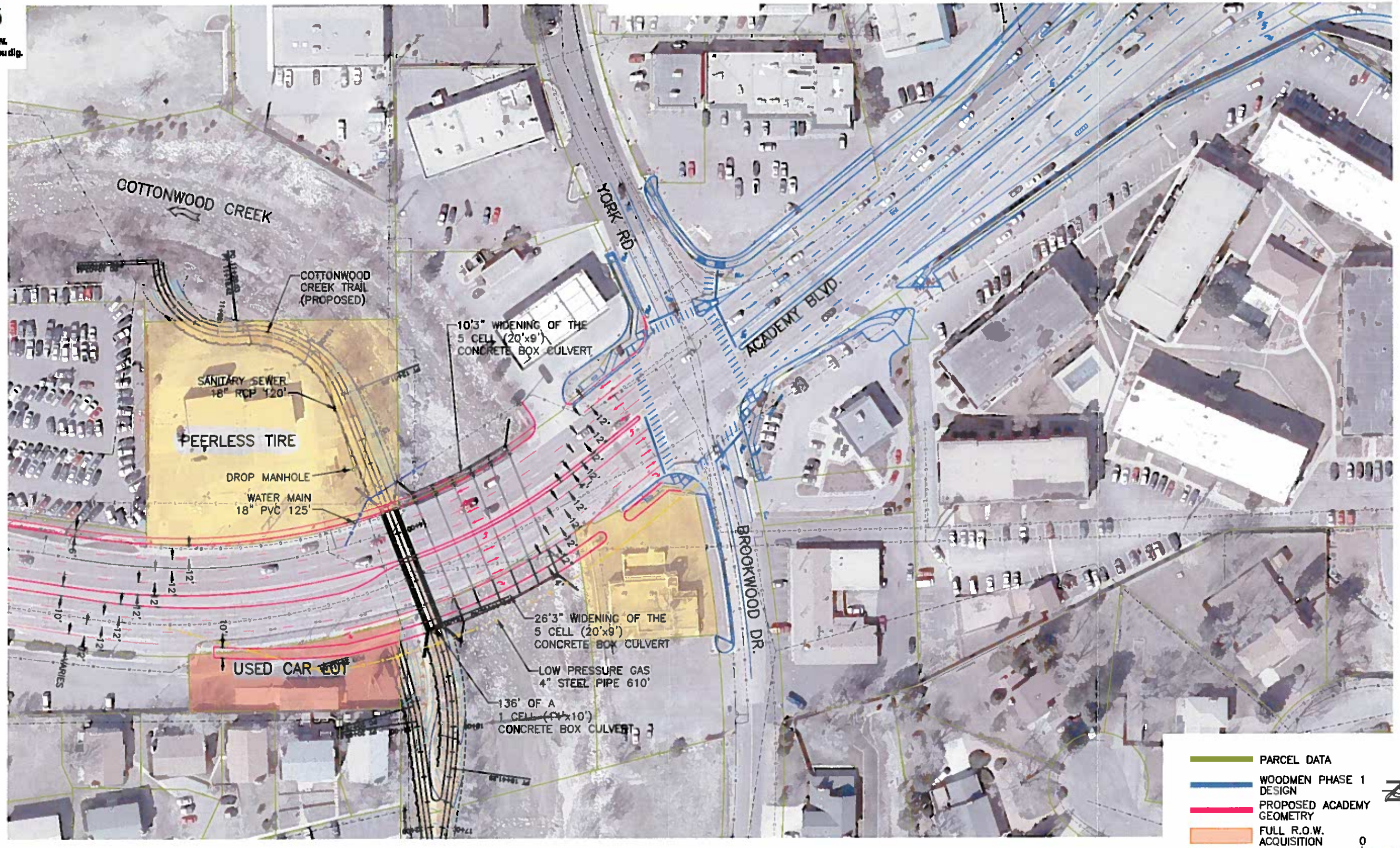

Computer File Information			
Creation Date:	11/7/11	Initials:	BJH
Last Modification Date:	2/24/12	Initials:	BEN
Full Path:	S:\11117\CAD\Sheets		
Drawing File Name:	R11117PLN02.dwg		
Acad Version 2009	Scale: 1"=100'	Units:	English

Index of Revisions		

CITY OF COLORADO SPRINGS
We Create Community
PO Box 1575, Mail Code 410
30 S. Nevada, Suite 401
Colorado Springs, CO 80901
Phone (719) 385-5918
Fax (719) 385-5537

FELSBURG HOLT & ULLEVIG
508 S. Tejon St.
Colorado Springs, CO 80903
Phone (719) 314-1800
Fax (719) 314-1804

As Constructed	
No Revisions:	
Revised:	
Void:	

ACADEMY BOULEVARD OVER COTTONWOOD CREEK
ROADWAY PLAN

Designer:	SRM	Detailer:	BJH
Sheet Subset:	ROADWAY	Subset Sheets:	RP-2 of 2

Project No./Code
11-117
Sheet Number 6

S:\11117\CAD\Sheets\R11117PLN02.dwg, 2/24/2012 6:20:51 PM, Ben

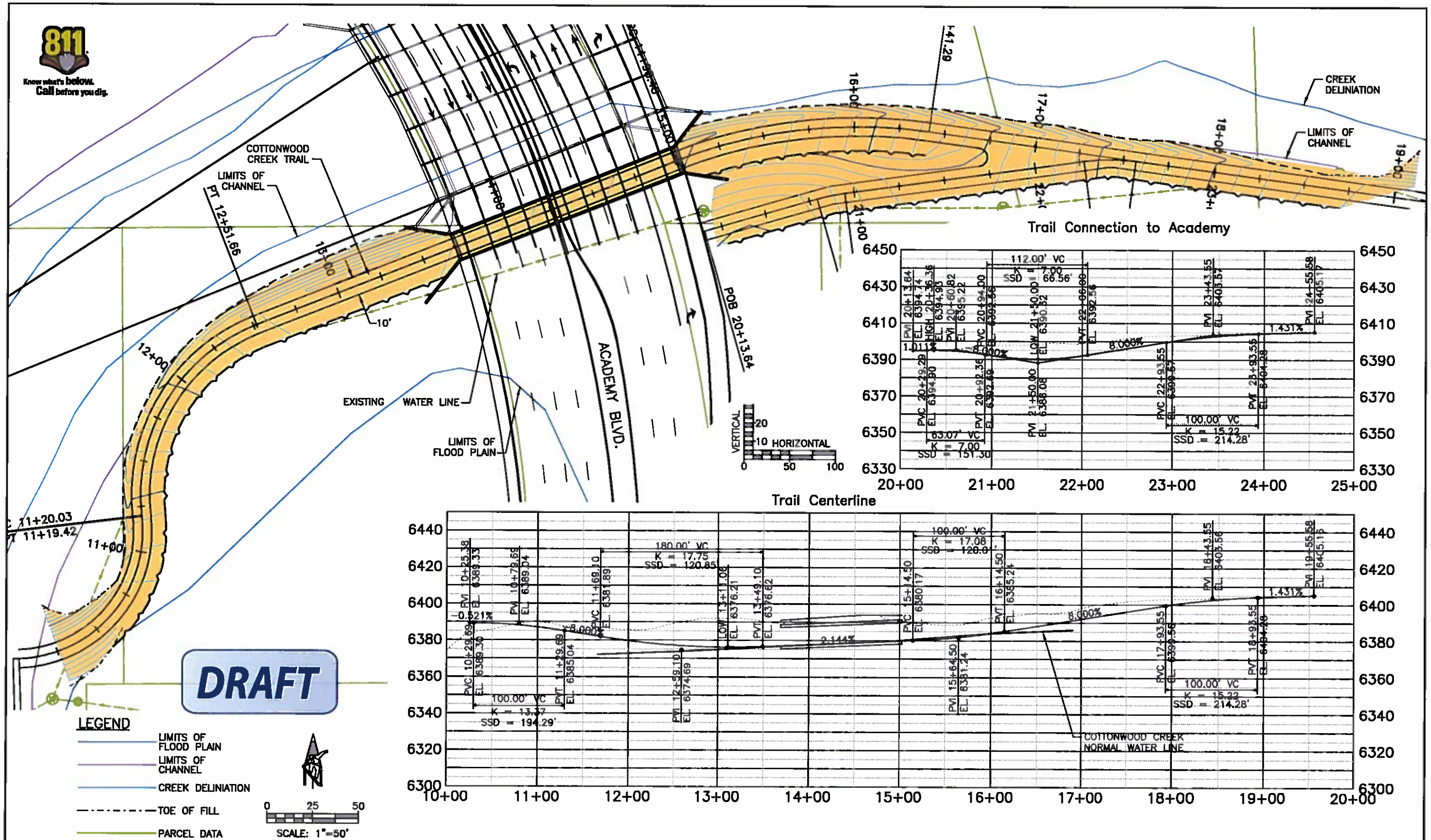

Computer File Information			
Creation Date:	11/8/11	Initials:	BJH
Last Modification Date:	2/8/12	Initials:	BEN
Full Path:	S:\11117\CAD\Sheets		
Drawing File Name:	R11117PLN03.dwg		
Acad Version 2009	Scale: 1"=50'	Units:	English

Index of Revisions

CITY OF COLORADO SPRINGS
We Create Community
PO Box 1575, Mail Code 410
30 S. Nevada, Suite 401
Colorado Springs, CO 80920
Phone (719) 385-5918
Fax (719) 385-5537

FELSBURG HOLT & ULLEVIG
508 S. Tejon St.
Colorado Springs, CO 80903
Phone (719) 314-1800
Fax (719) 314-1804

As Constructed
No Revisions:
Revised:
Void:

ACADEMY BOULEVARD OVER COTTONWOOD CREEK TRAIL ALTERNATIVE 1

Designer:	JC	Detailer:	BJH
Sheet Subset:	TRAIL	Subset Sheets:	TR 1 of 1

Project No./Code: 11-117

Sheet Number 7

I:\11117-01\Cost Estimates\UTILITY RELOCATE PLAN.dwg, 2/24/2012 1:40:15 PM, Patrick

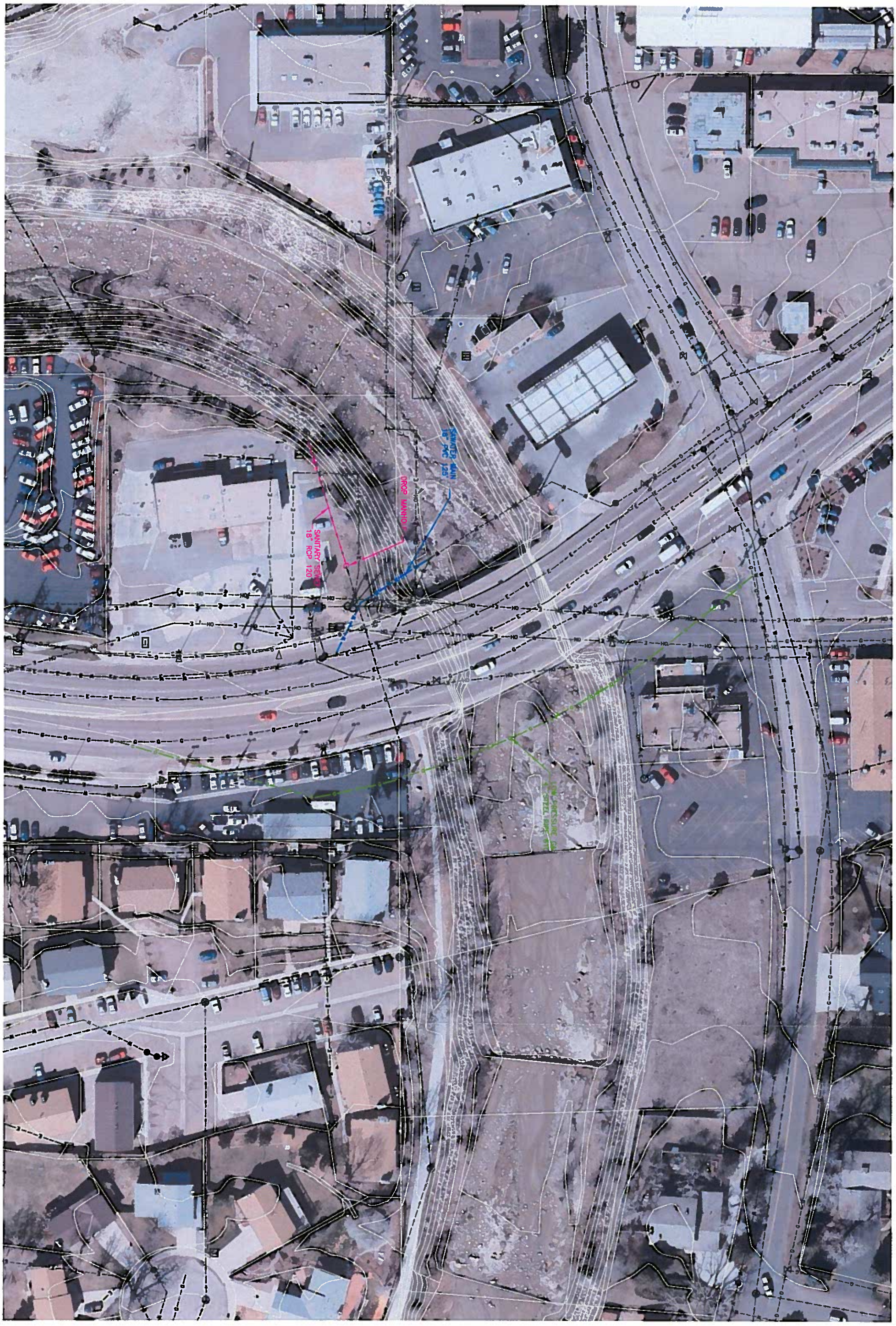

Legend
Woodmen Phase 1 Design
Proposed Academy Geometry
Existing CBC Outline
Proposed CBC Extension
100-year Flood Plain
Parcel Boundaries
Cottonwood - Colorado Springs
Feet
0
250
500
NORTH